IMPORTANT : All INNOWOOD products must be installed in strict accordance with INNOWOOD'S current (at time of installation) "INSTALLATION MANUAL" and "CARE AND MAINTENANCE GUIDELINES" which can be downloaded from our website : www.innowood.com

Failure to comply with these documents may void warranty and result in an unsatisfactory outcome.

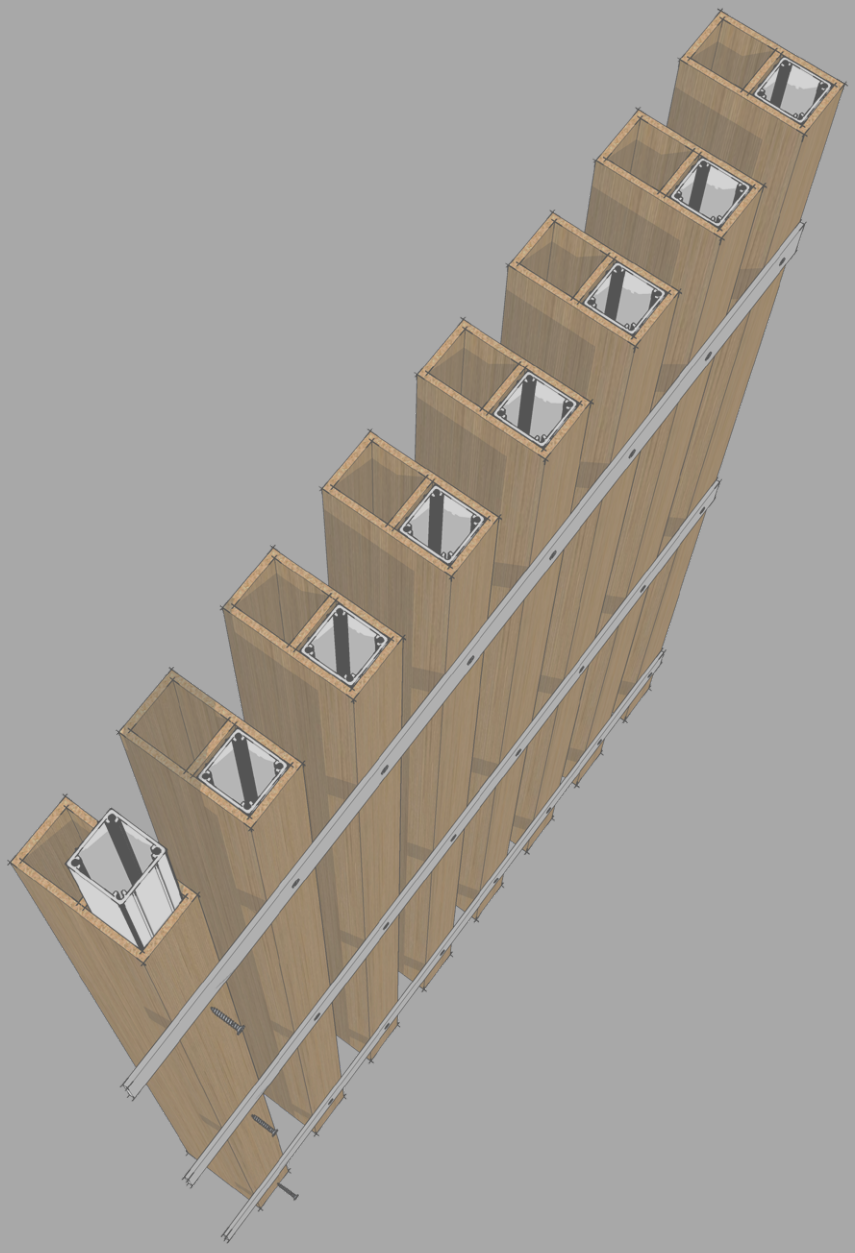

INNOSCREEN

FACE/REAR FIXING
INSTALLATION MANUAL

INNOWOOD®
SUSTAINABLE TIMBER ALTERNATIVE

BEFORE YOU COMMENCE

Please note that:

The Product is subject to natural variation* in finish as part of the manufacturing process. The purchaser or their installer/builder is responsible for inspecting, prior to installation, the colour, finish and size of the product, identifying whether the Product has any other defect or manufacturing fault, and for ensuring the Product meets surface appearance and product specification requirements. Subject to the terms of our warranty, INNOWOOD is not liable for claims made after the installation of the Product that relate to surface appearance and product specification.

*INNOWOOD product is made predominantly from timber waste, colour will vary up to +/-20% according to the timber used in its manufacture.

It is the responsibility of the specifier or other party to ensure that the information in this manual is appropriate for the intended application and further design detailing may have to be made for specific applications that fall outside the scope of the manual.

Information contained on this document is the copyright of INNOWOOD Australia Pty Ltd. Use or copying of this document in whole or in part without the written permission of INNOWOOD is not permitted.

INNOSCREEN FIXING - PROFILES

INNOVATIVE RANGE:

FACE & REAR FIXING			
PROFILE SECTION			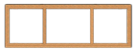
PRODUCT CODE	SS05050	RS10050	RS15050
COVERAGE	50mm	50/100mm	50/150mm
MAX SPAN WITHOUT ALUMINIUM INSERT *	450mm	450mm	450mm

** Guidelines only and longer or shorter spans may be achieved depending on region and wind load, please confirm with a structural engineer prior to installation.*

Installation Tips and Requirements

INNOWOOD products can be worked with ordinary woodworking tools such as:

Circular Saw	Cordless Drill
Crosscut Mitre Saw	Level & Chalk Line
Carpenters Square	Tape Measure

NOTE:

To ensure long- term performance, we recommend that a professional trade person carry out the installation. The installation MUST be carried out in accordance with these instructions including the use of all trims and accessories.

Site storage & Product Handling

- INNOWOOD boards should not be stored in the open or covered or wrapped with plastic sheet. INNOWOOD boards are a finished product, do not dump or drop when loading or unloading. Always handle with care.
- INNOWOOD boards should be stored under cover and protected from the elements (including direct sunlight and rain) until ready to install. Remove any plastic wrap including shrink wrap and store on a dry and flat surface supported at max 450mm centres.
- When removing INNOWOOD boards from the pack, do not slide boards against each other, lift the boards and set them down carefully.
- INNOWOOD boards should be carried on their edge for better support.
- When handling INNOWOOD boards take care to avoid scratches, nicks and other damage to the boards.

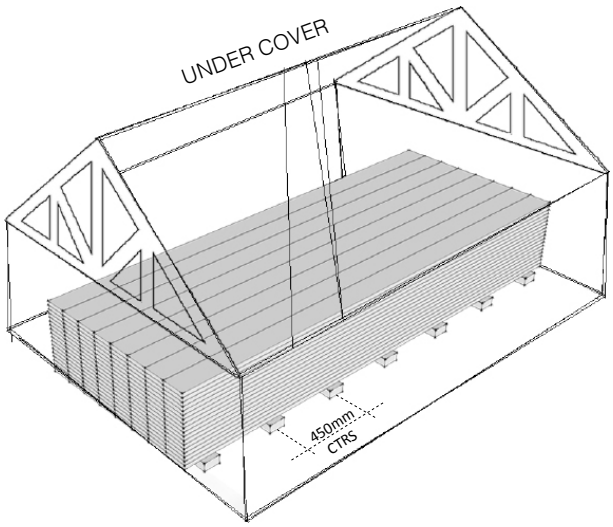

Thermal movement

Any wood based products will expand and contract with changes in temperature. The amount of expansion varies according to the amount of change in temperature. Although thermal movements are reversible, these movements due to temperature change may vary by up to 2mm per meter.

INNOWOOD boards that have been exposed to direct sun for several hours, prior to installation will have expanded more than boards left in the shade. It is important to maintain an average consistent temperature for all boards as they are being installed.

Avoid installing in full sun if ambient temperature is above 30°C. Ensure the boards are kept out of the sun until installed to limit the boards expansion prior to installation. INNOWOOD products can tolerate a temperature range from -20°C to +65°C.

If the product is to be used in an environment outside of this temperature range, please consult INNOWOOD.

Please bear in mind that:

- Where INNOWOOD boards are to be screw fixed, clearance holes must be pre-drilled before fixing (both INNOWOOD boards and accessories).
- The clearance hole to be drilled must be slightly greater than the outside screw thread diameter.
- Screws must be minimum 15mm but maximum 25mm away from board edges (unless noted otherwise)
- INNOWOOD products must not be used for any structural purpose.
- The cut surface must be sealed with a layer of protective coating such as a water based deck sealer before installation.
- When exposed to direct sunlight, surface temperature may be significantly hotter than ambient temperature.

FRAMING CONSTRUCTION REQUIREMENTS

- Timber framing must comply with AS 1684: Timber Framing Code.

  Use adequately seasoned timber to minimise shrinkage and associated building movement.

- Steel framing must comply with AS/NZS 4600: Cold-Formed Steel Structure or AS 3623: Domestic Metal Framing.

  Where steel framing members are specified, use only corrosion resistant steel framing.

INNOWOOD Screening can be fixed to seasoned timber batten/ top hat, a proprietary structural system or directly to structural substrate such as brick or masonry.

InnoScreen <u>must not</u> be fixed directly to metal cladding as adequate ventilation is required behind screen. Metal top hats or timber battens must always be used over the top of metal cladding to create a minimum cavity of 35mm.

Batten/top hat spacing can be increased by using Aluminium Inserts/Stiffener as per the following table:

<u>Fixing Span with Aluminium Insert / Stiffener:</u>

	FS04535	FS06535	FS06535	SS05050 RS10050 RS15050
Aluminium Inserts/Stiffener Size	45 x 35	50 x 35	50 x 35	39 x 39
Aluminium Inserts/Stiffener Code No.	AL4535	AL5035	AL5035	AL3939
Maxmium Fixing Vertically Span	1600mm	2700mm	2700mm	2700mm
Maxmium Fixing Horizontally Span	1600mm	2000mm	2700mm	2000mm

* **Based on a single span, if larger spans are required please consult INNOWOOD.**

For higher wind-load areas reducing fixing span may be required.

Each single length of screening must be fixed at minimum 3 fixing points.

As with all screening profile products the adequacy of a proposed installation should always be checked by a qualified engineer.

InnoScreen is not site engineered for balustrade surge or load bearing compliance such as compliance can be assessed upon request and will require third-party certification.

Timber Support Battens

INNOWOOD screen can be screwed to timber battens provided the following requirements are satisfied:

- When using timber support battens they must have a face width not less than 45mm.
- Timber must be adequately seasoned & deemed for structural use.
- Timber battens must be set at the required centres as per max span figures on page 2 & 4.
- Fixing spans and screw types are shown in the following tables.

RECOMMENDED SCREW TYPE FOR TIMBER BATTENS

STRUCTURE	RECOMMENDED SCREW TYPE
Seasoned Timber	#14 bugle head batten screw with minimum 40mm embeddment
Steel Framing	#14-10x50 self drilling hex head (35mm batten) or #14 -16 x 65mm self drilling hex head (45mm batten)
Concrete	Ø10 screw in self tapping masonry anchor with min 50mm engagement. Eg. Iccons- thunderbolt pro hex head

Steel Top Hat Battens

INNOWOOD screen can be screwed to steel top hat battens provided the following requirement are satisfied:

- Top hats must have a face width of no less than 50mm and a wall thickness of no less than 1.15mm.
- Top hats must be set at the required centres as per max span figures on page 2 & 4.
- Top hats must be fixed to structure at the required centres as per the table below and must always be fixed through both legs at all fixing points.

MAXIMUM STEEL TOP HAT FIXING SPAN

STEEL TOP HAT		MAXIMUM FIXING SPAN
50 / 15	15 X 50mm	500mm
50 / 24	24 X 50mm	700mm
50 / 35	35 X 50mm	800mm
50 / 50	50 X 50mm	950mm

RECOMMEND SCREW TYPE FOR STEEL TOP HAT

STRUCTURE	RECOMMEND SCREW TYPE
Seasoned Timber	#12 Type 17 Hex Head Tek screw with minimum 40mm embeddment
Steel Framing	#12-14 X 30mm Self drilling Hex head Tek Screw
Concrete	ø6.5 screw in self tapping masonry screw with minimum embeddment of 50mm. Eg. Iccons - Grabcon

Screws

Screws must comply with AS 3566 Self Drilling Screws for the Building and Construction Industries.

Screws must have a minimum Class 3 corrosion resistance, suitable for external applications in mild, moderate industrial and marine environments and Class 4 or stainless steel for severe environments.

Screws with class 1 or 2 corrosion resistance may be used for internal use depending on the individual application.

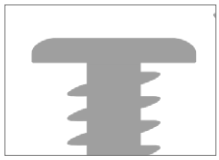
Wafer Head

Countersunk Head

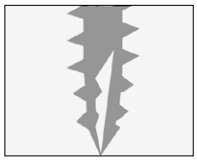
Decking/ Type 17

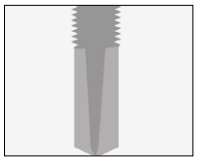
Self-drilling

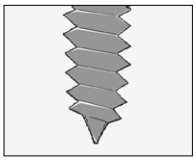
Self-tapping

General Framing Notes

- Battens/Top hats must be true plumb and level to ensure a professional outcome. Packing cannot be used between Battens/Top hats and screen .
- Framing that does not meet all of` the criterea in this section will be inadequate and may result in the finished screen showing any of the following characteristics: cupping, bowing, warping, expansion or contraction.

Expansion Joints

Never span InnoScreen accross expansion joints in structure. If necessary terminate the screen on either side of any expansion joint to prevent damage to the screen and/or structure.

Adhesive

Where adhesive is mentioned in this manual it must be a high quality polyurethane adhesive (we reccomend sikaflex 11FC) or construction adhesive (we reccomend selleys liquid nails rapid cure) for external use.

DESIGN CONSIDERATIONS

INSTALLING ABOVE REFLECTIVE SURFACES -

Reflective surfaces such as metal roofing can add to the heat load of the cladding due to UV rays reflecting off the surface which may adversely affect the Innowood product under normal installation conditions. Therefore additional supports must be used to counter this as follows:

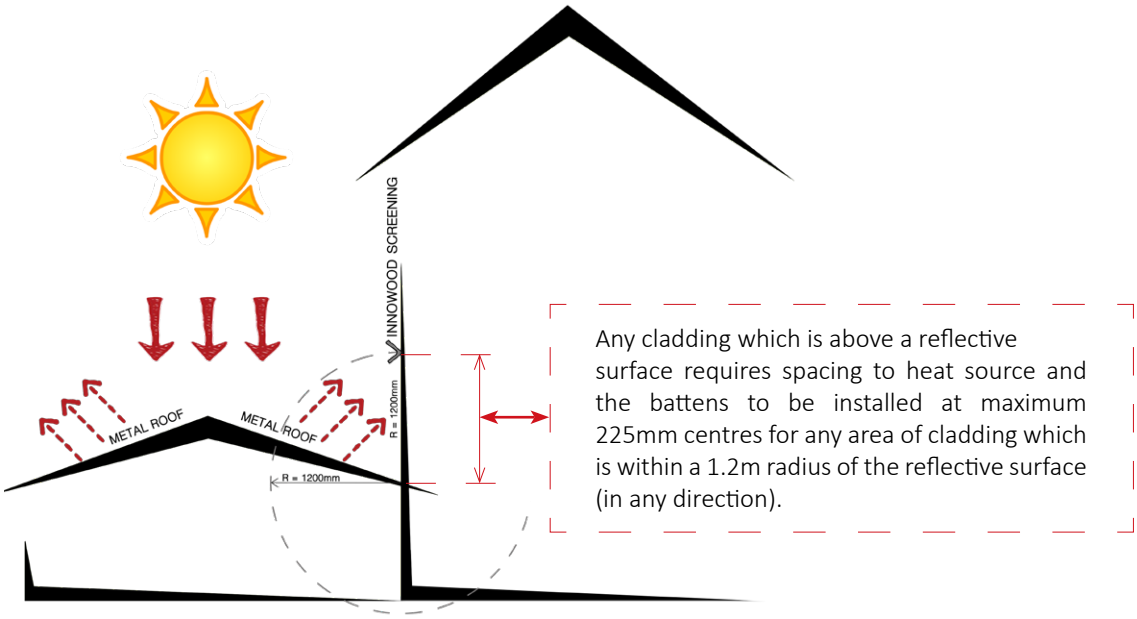

METAL CLADDING -

Innowood screening, when being installed over metal cladding, must require spacing to all cover trims and be installed onto battens or top hats so as to achieve a cavity between Innowood screen and cladding. This spacing and cavity requirement assists in preventing the screen profile from overheating and potentially warping.

Minimum Cavity Size : 35mm

FIBRE CEMENT SHEETING -

Screening may be fixed directly over FC sheeting. However the fixings must penetrate through the FC sheeting and into the support framing behind. This should be taken into account when installing FC support framing to ensure the members are situated in the required locations as per this manual.

INSTALLATION PROCEDURE

Please note that this instruction is applicable for the following profiles: SS05050, RS10050, RS15050 (hollow profiles can be installed with aluminium inserts to achieve longer fixing span)

FACE/REAR FIXING

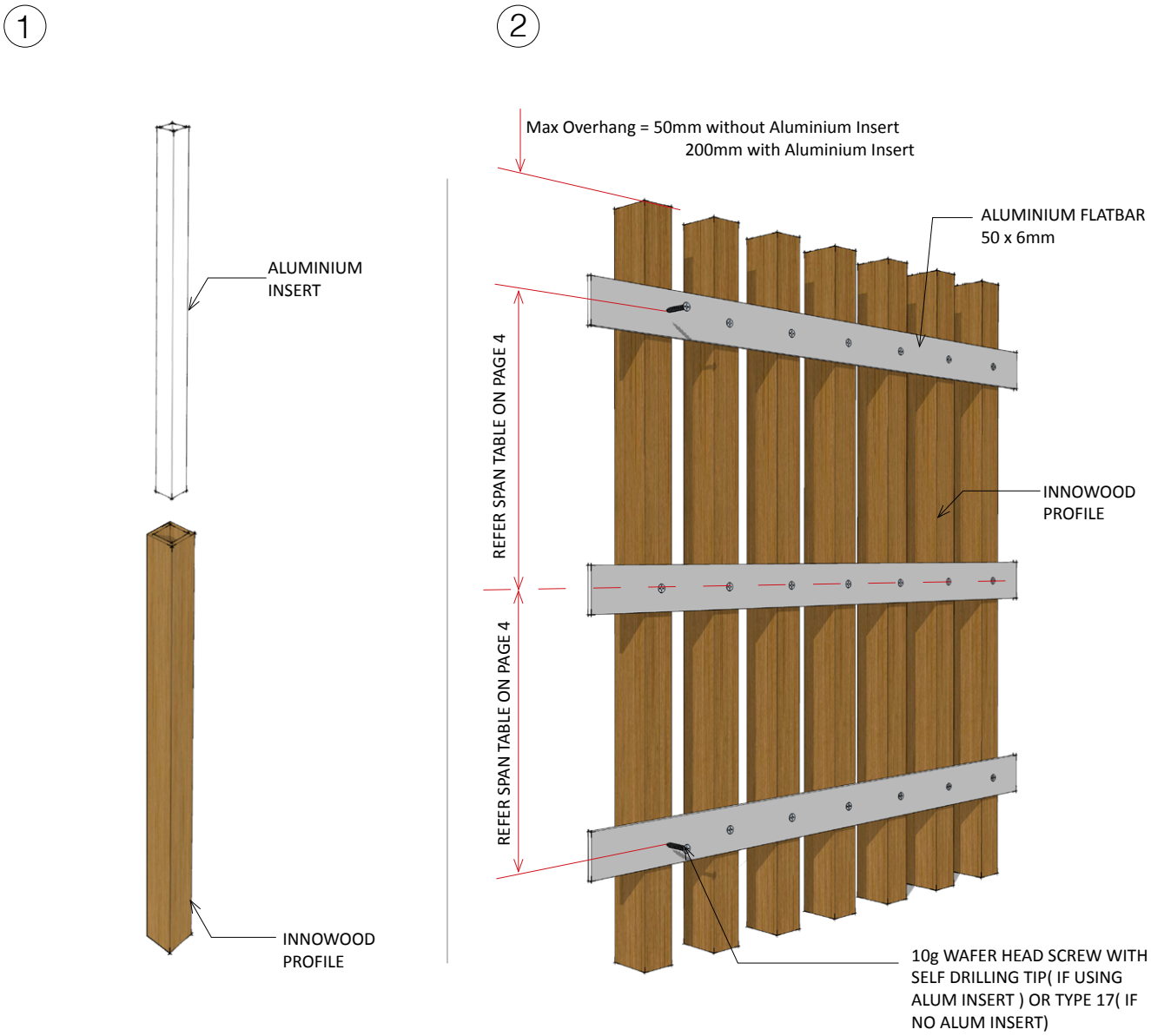

1. Insert the aluminium stiffener into the hollow profile.
   Skip this step for installations without aluminium inserts, however fixing span should be 450mm.
   Note: Aluminium inserts must be 20-30mm shorter than batten at each end.

2. Predrill clearence holes in the flatbar at the required batten spacing distance. Screw flatbars onto battens to create panels. Fix panels by screening through flatbars to structure.

3. Finish off both ends with end caps if necessary using high quality polyurethane adhesive or construction adhesive for external use.

TYPICAL FIXING DETAIL- FOR WINDOW & BALCONY PRIVACY SCREEN- WITH LARGE SPAN OPENING

(Applicable for SS05050, RS10050 & RS15050.)

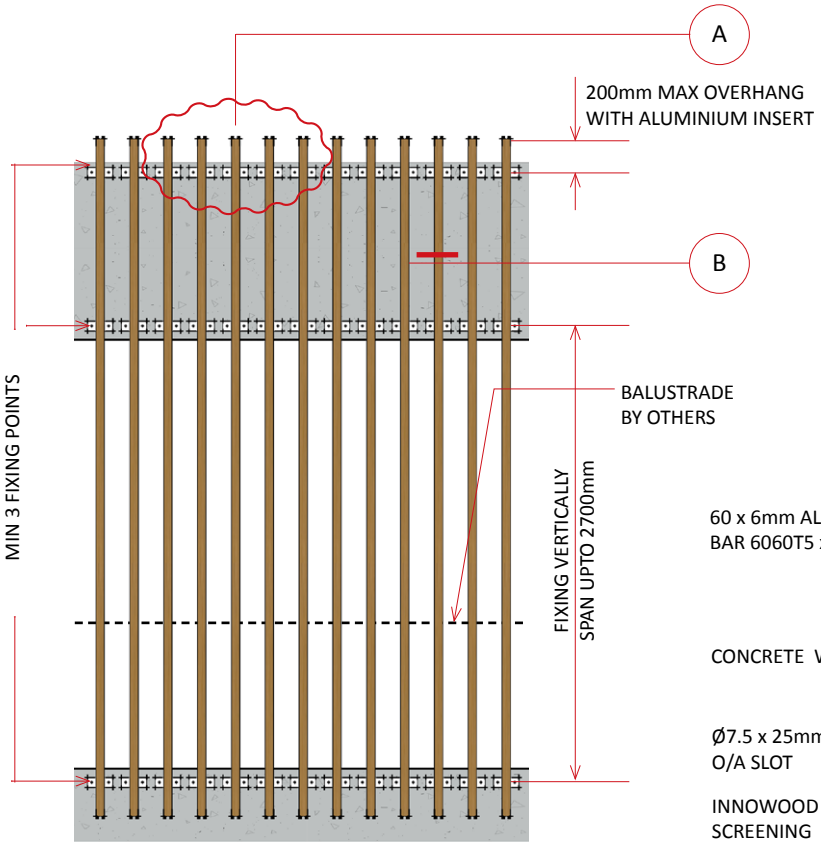

Note:
The design of window and balcony must be in line with the Building Code of Australia (BCA) requirements to prevent fall from heights. Innowood privacy screen should not be used in place of a balustrade or be used as fall protection.

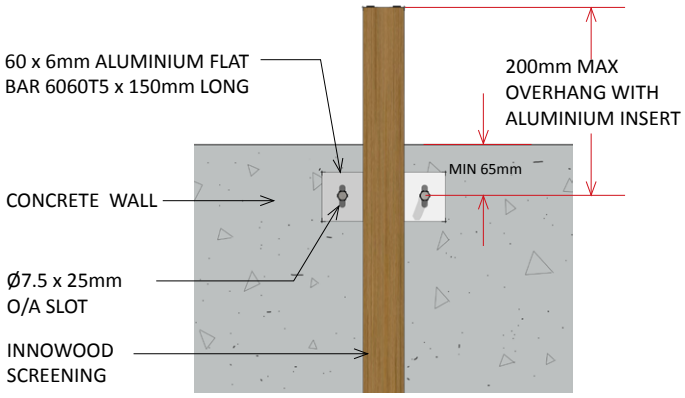

ELEVATION (Reference)

Note: Each single lengths of screening must be fixed at minimum 3 fixing points.

DETAIL- A

Option 1 Using FS15050 As Example

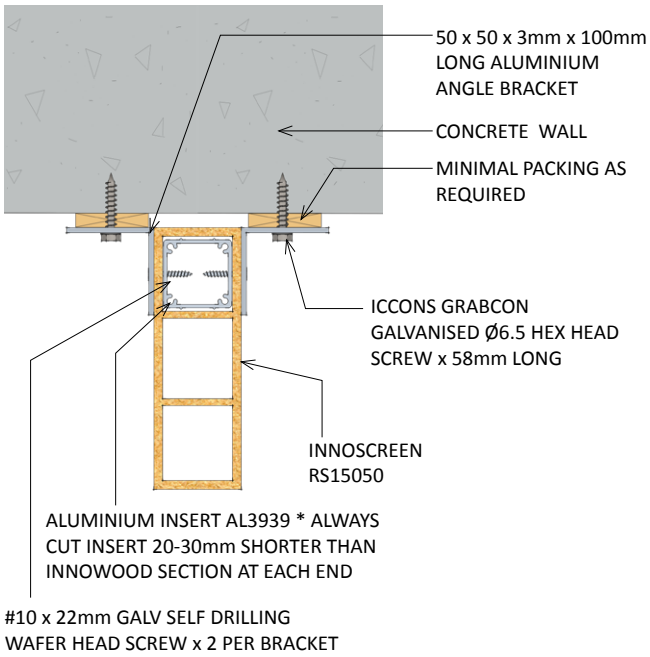

Option 2 Using FS10050 As Example

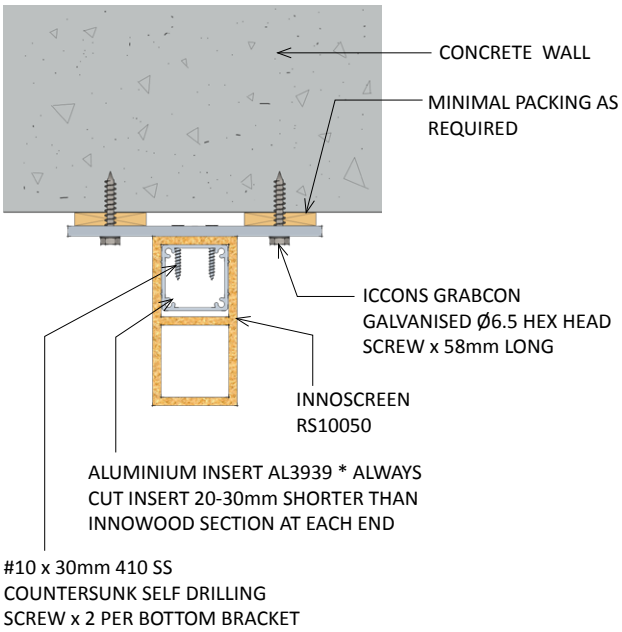

SECTION - B

STANDARD BUTT JOINT TREATMENT

2 lengths must not be joined together and must always be set with a gap as indicated below:

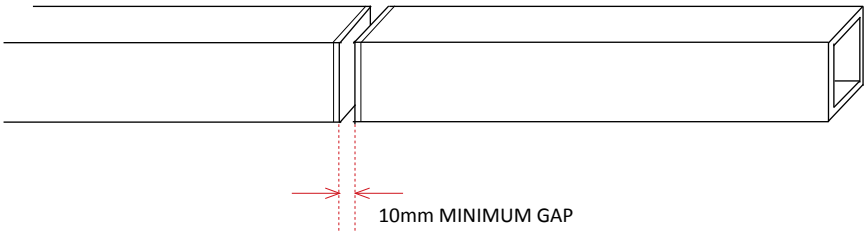

ALTERNATIVE FIXED BUTT JOINT TREAT-

- Sample detail only, requires Innowood approval prior to implementation

(Applicable for RS15050, RS10050, SS05050 Face or Side Fixing)

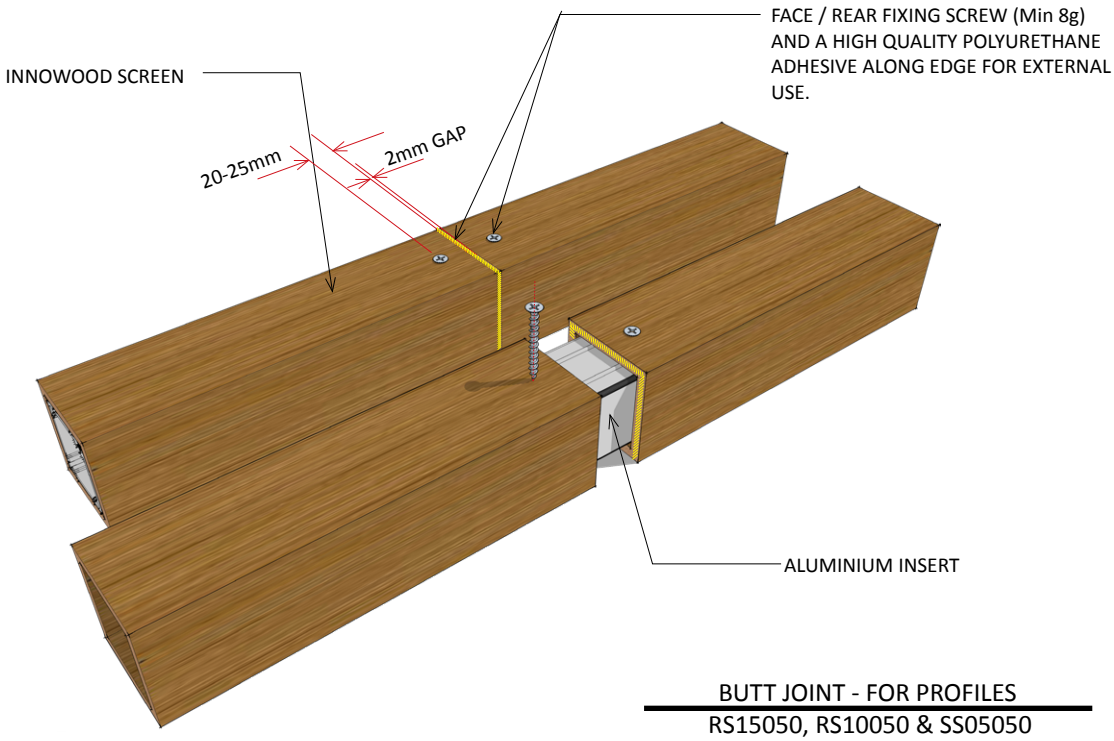

BUTT JOINT - FOR PROFILES
RS15050, RS10050 & SS05050

ALTERNATIVE FIXED BUTT JOINT TREATMENT

- Sample detail only, requires Innowood approval prior to implementation

(Applica ion for SS05050, RS10050 & RS15050 Face or Side Fixing)

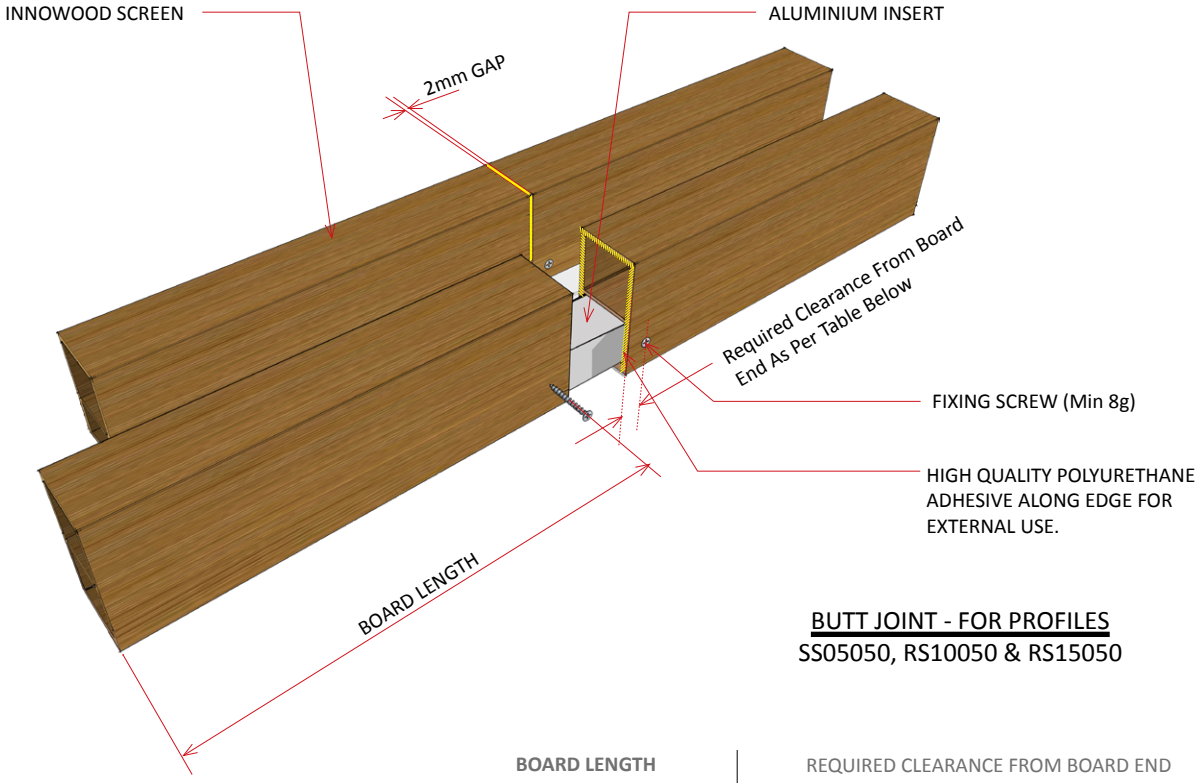

BUTT JOINT - FOR PROFILES
SS05050, RS10050 & RS15050

BOARD LENGTH	REQUIRED CLEARANCE FROM BOARD END
0-2000mm	75mm
2000mm and over	100mm

STANDARD MITRED END CAP DETAIL

STEP 1

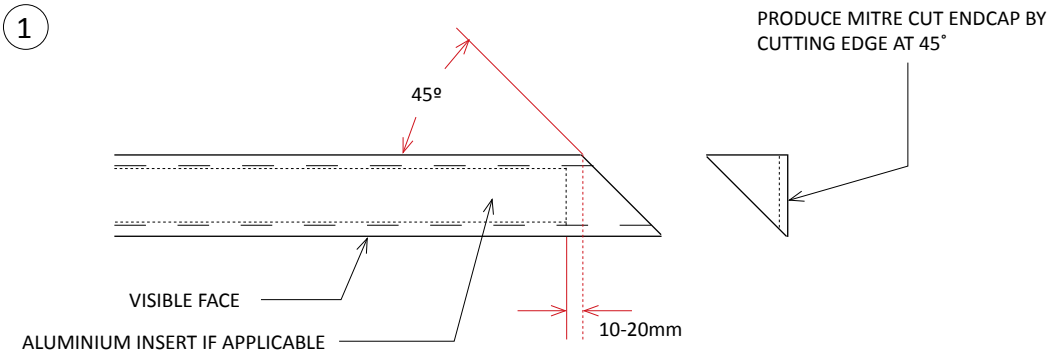

STEP 2

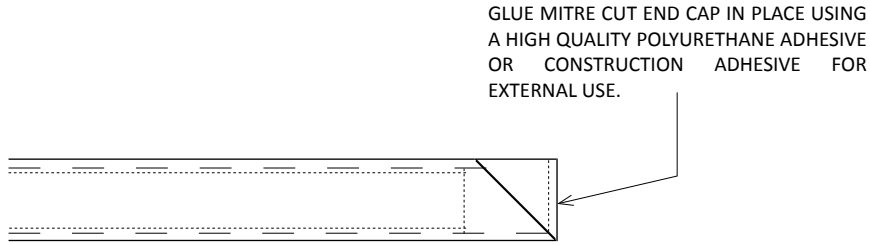

OPTIONAL END CAP DETAIL

OPTION 1:

For normal hollow profiles, glue fix end caps are available.

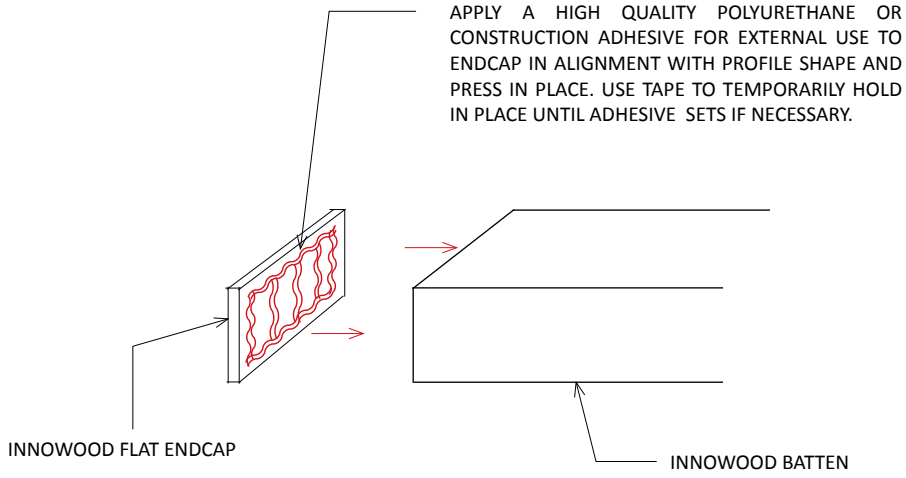

OPTION 2:

The following method uses Aluminium Spiggots to create a closed ended section.

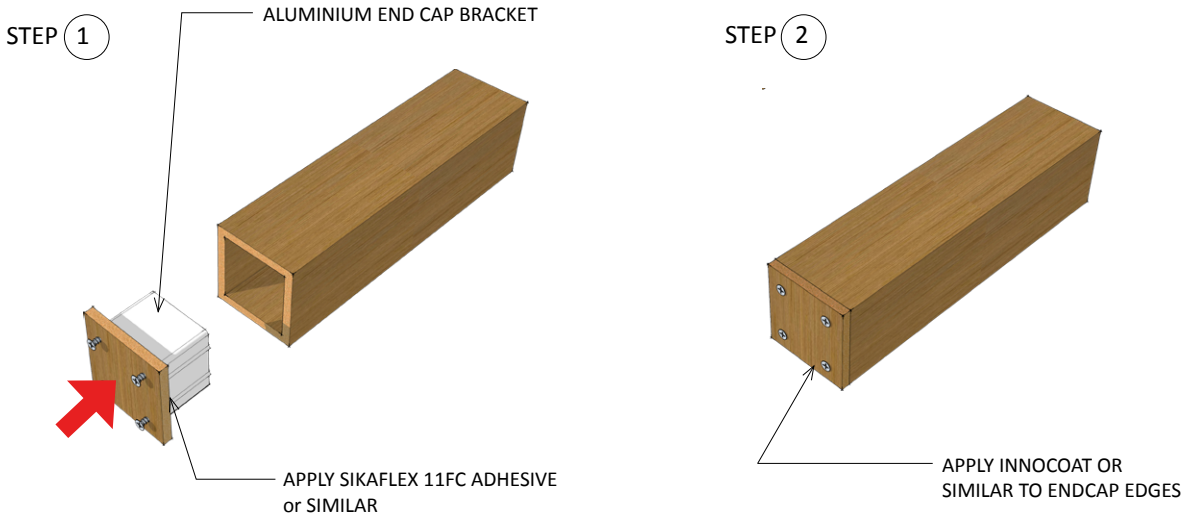

1. Ensure the ends of the hollow profile are cleanly cut, dry and free from dust.
2. Screw fix the Endcap Bracket spiggot on to the endcap cover piece as show in fig above.
3. Apply Sikaflex 11FC or similar to both mating surfaces - spiggot and inside of batten.
4. Press spiggot into batten and wipe away any excess adhesive.
5. Ensure pieces are kept in place until adhesive is set.
6. If the cover piece requires slight shaping while set in, carefully sand the square corners as required.
7. Ensure the 4 sides of the cover piece are clean, dry and free from dust.
8. Then carefully apply InnoCoat or similar to the uncoated sides of the cover piece.
9. Similar process can also be used as an option to do a Mitre Cut Corner Joint as shown in the fig below:

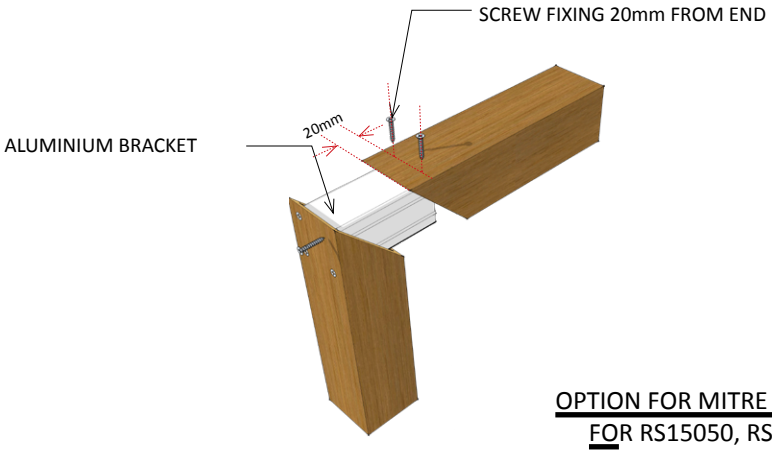

OPTION FOR MITRE CUT CORNER JOINTS
FOR RS15050, RS10050 & SS05050

NOTES

INNOWOOD®

SUSTAINABLE TIMBER ALTERNATIVE

FOR MORE INFORMATION, PLEASE VISIT INNOWOOD AT

WWW.INNOWOOD.COM

OR CALL 1300 787 717